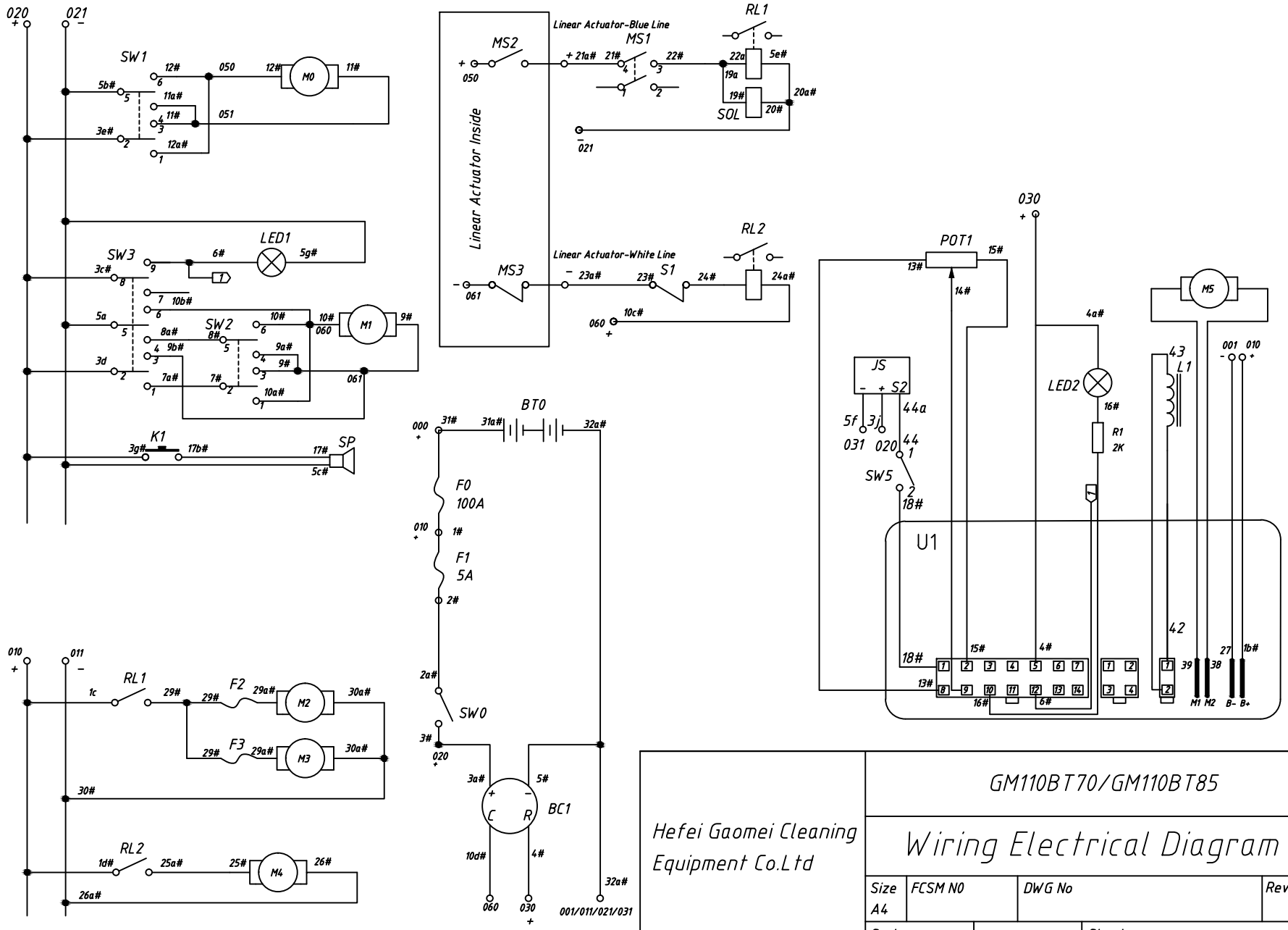

Hefei Gaomei Cleaning Equipment Co.Ltd

GM110BT70/GM110BT85

Wiring Electrical Diagram

Size	FCSM NO	DWG No	Rev
A4			
Scale		Sheet	